C103

1 Piece Threaded Stainless Steel Ball Valve
Reduced Bore - Lockable

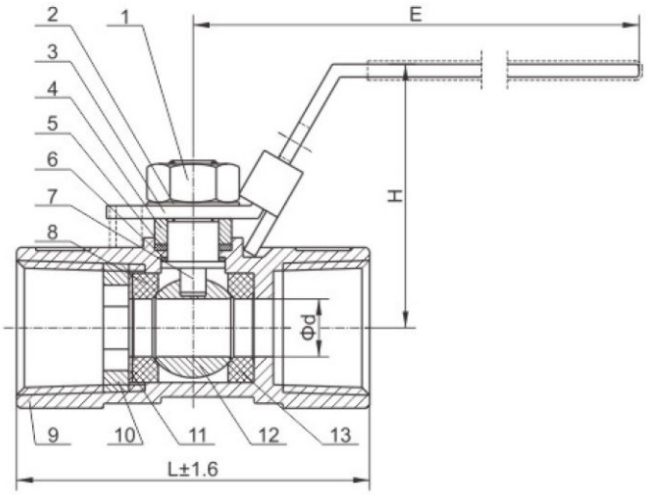

TECHNICAL SPECIFICATIONS

NOMINAL PRESSURE		1000PSI	
Test Pressure	Shell	10.4	MPa
	High Pressure Closure	7.6	
	Low Pressure Closure	0.4 ~ 0.7	
Applicable Temperature		-29 ~ 120 °C	
Applicable medium: water, oil, gas			

PARTS LIST AND MATERIALS

NO.	PART NAME	MATERIAL
1	Nut	304
2	Spring Washer	304
3	Handle	201SS+PVC
4	Gland	304
5	Packing	PTFE
6	Thrust Gasket	PTFE
7	Stem	304
8	Seat	PTFE
9	Body	CF8
10	Lock Nut	304
11	Washer	304
12	Ball	304
13	Seat	PTFE

DIMENSION

Unit: mm

SIZE	d	L	H	E
1/4"	5	40	32	72
3/8"	7	44	32	72
1/2"	9	54	36	95
3/4"	12	59	38	100
1"	15	71	45	115
1 1/4"	20	78	55	125
1 1/2"	25	84	60	125
2"	32	101	63	140
2 1/2"	38	120	95	175
3"	49	140	100	175
4"	65	185	130	235