Basket Strainers

Basket Strainers feature top removal of the screen. The screen is in the form of a basket, with a lifting handle, so that all particulate captured and retained by the screen can be easily removed for disposal. They are intended for applications where larger amounts of solid particulate are expected, and where clean-out will be frequent. Most models have a standard or optional "Quick Release Cover" to allow fast and easy screen removal without the use of tools. For easily flushable solids, a modified cone-bottom basket can be fitted, with automatic or manual blow-down through the drain port. This will allow clean-out without removal of the screen, and without interrupting the process flow.

A. Pressure gauges to indicate clogged screen
B. Isolation valves for servicing strainer

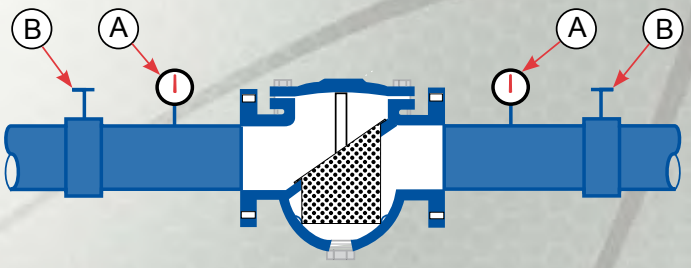

Flow Rate Vs. Pressure Drop (Clean Screen)

Basket Strainers - Threaded

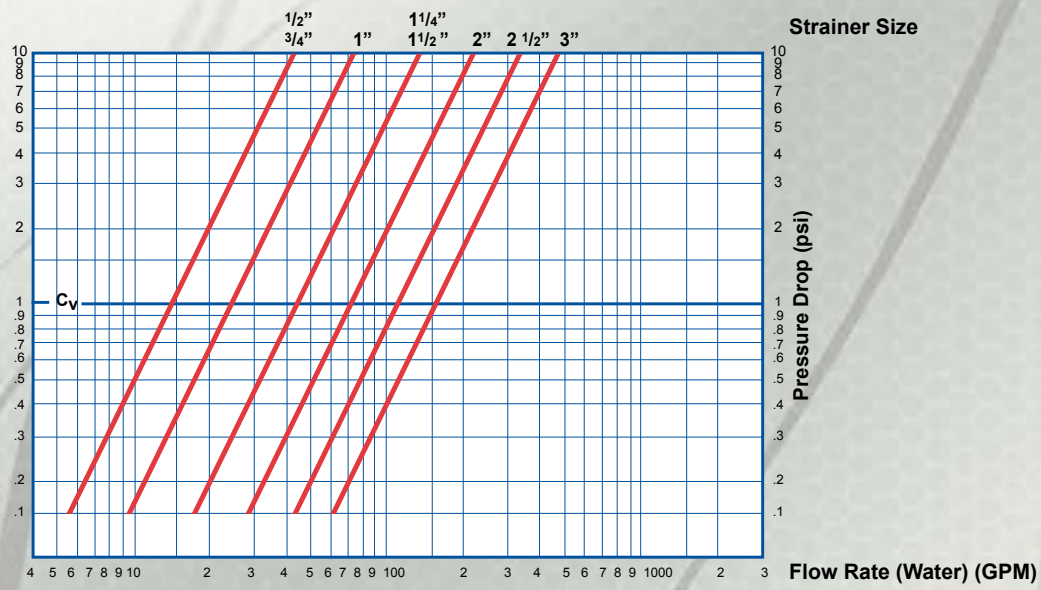

Basket Strainers - Flanged

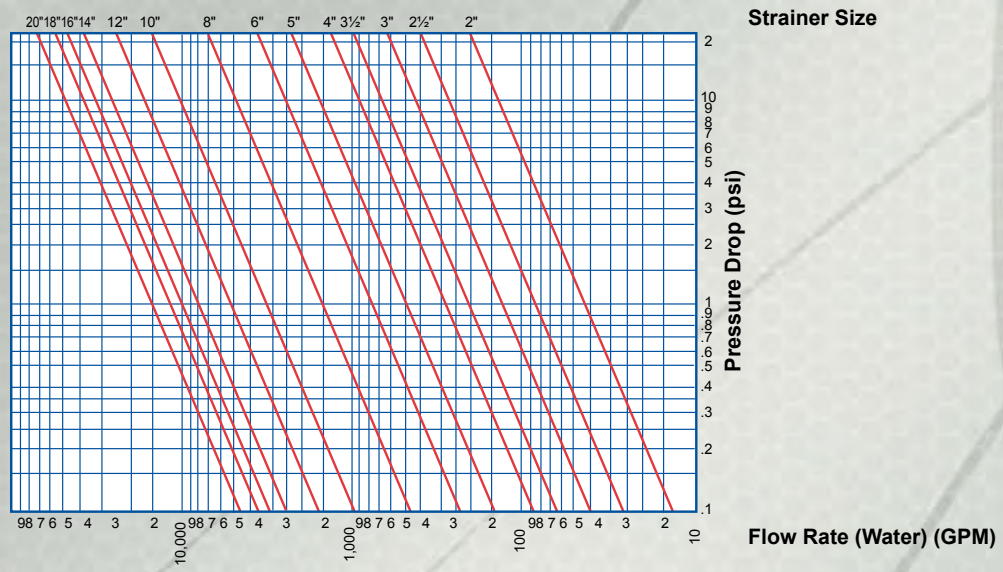

Note: These charts are for theoretical calculations **ONLY**. Please contact our office with your exact specifications and you will be provided with factory calculations.

Cast Simplex Strainers

BTC125 - Cast Iron

NPT Threaded and Quick Open Swivel Clamp Cover

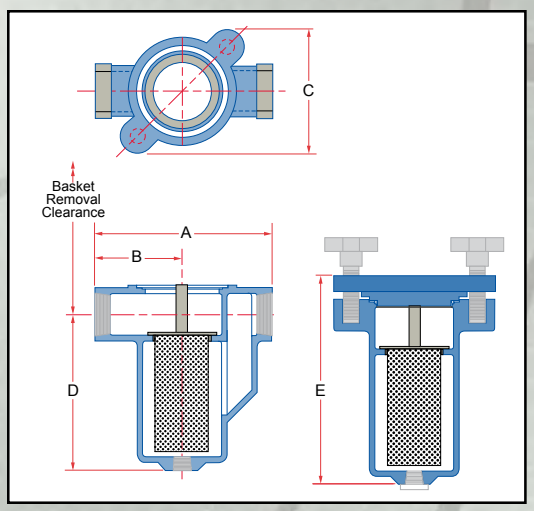

Sure Flow Basket Strainers feature top removal of the screen. The screen is in the form of a basket, with a lifting handle, so that all particulate captured and retained by the screen can be easily removed for disposal. They are intended for applications where larger amounts of solid particulate are expected, and where clean-out will be frequent. Models are standard with "Swivel Clamp Cover" to allow fast and easy screen removal without the use of tools. Covers have BUNA-N O-ring seals eliminating the need to change gaskets each time the strainer is serviced.

Notes:

- Must specify if for steam service

Manufacturer reserves the right to modify dimensions, materials, or design. Consult factory for certification.

Construction

Cast Iron - Body, Cover - ASTM A126 Class B
BUNA-N - Cover O-Ring
All screens are Stainless Steel

Dimensions (Inches)									
Size		A	B	C	D	E	Drain	Basket Removal Clearance	Shipping Weight (LBS)
Inches	Prefix								
1/2	0050	6 3/8	2 13/16	5 7/16	5 1/4	7	1/2	5 7/8	18
3/4	0075	6 7/8	3 5/16	5 7/16	5 1/4	7 5/8	1/2	6 1/2	18
1	0100	6 7/8	3 5/16	5 7/16	5 1/4	7 5/8	1/2	6 1/2	18
1 1/4	0125	8 3/8	4 1/8	5 7/8	7 3/8	9 3/4	3/4	9	30
1 1/2	0150	8 3/8	4 1/8	5 7/8	7 3/8	9 3/4	3/4	9	30
2	0200	9 5/8	4 1/2	6 5/8	7 1/8	9 3/4	1	9 1/4	50
2 1/2	0250	12 3/4	5 3/8	8 3/16	8 5/8	12	1 1/2	11 3/8	65
3	0300	13 1/4	5 3/8	8 5/16	12	15 3/4	1 1/2	15	70

Ordering Information

Example: Include full description

Size (Prefix)	Model Number	Screen Opening
0150	**BTC125**	**032**

1 1/2" NPT, Basket Strainer, Cast Iron, 1/32" Perf Screen

Operating Pressures and Temperatures		
Type	Size	psi @ Temp WOG
BTC125	1/2" - 3"	200 @ 150 °F

Standard Screens		
Size	Standard	Opening
1/2" - 3"	1/32" perf	0.032"

Cast Simplex Strainers

BTC150SS - Cast 316 Stainless Steel

NPT Threaded and Quick Open Swivel Clamp Cover

Sure Flow Basket Strainers feature top removal of the screen. The screen is in the form of a basket, with a lifting handle, so that all particulate captured and retained by the screen can be easily removed for disposal. They are intended for applications where larger amounts of solid particulate are expected, and where clean-out will be frequent. Models are standard with a bolted "Swivel Clamp Cover" to allow fast and easy screen removal with minimal tools. Covers have Viton O-ring seals, eliminating the need to change gaskets each time the strainer is serviced.

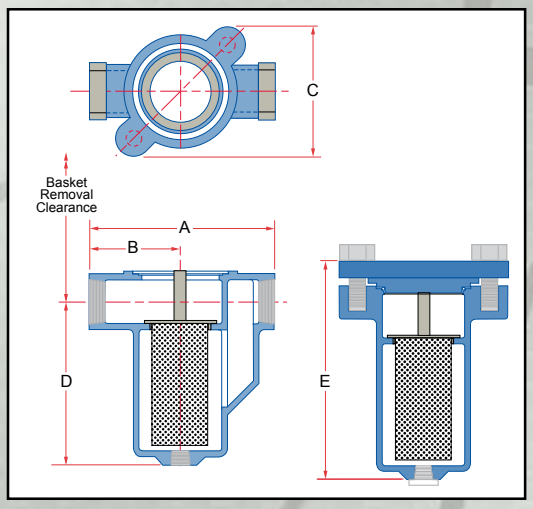

Notes:

- Must specify if for steam service

Manufacturer reserves the right to modify dimensions, materials, or design. Consult factory for certification.

Construction

Stainless Steel - Body, Cover - ASTM A351 Grade CF8M

Viton - Cover O-Ring

All screens are Stainless Steel

Dimensions (Inches)									
Size		A	B	C	D	E	Drain	Basket Removal Clearance	Shipping Weight (LBS)
Inches	Prefix								
1/2	0050	6 3/8	2 13/16	5 7/16	5 1/4	7	1/2	5 7/8	18
3/4	0075	6 7/8	3 5/16	5 7/16	5 1/4	7 5/8	1/2	6 1/2	18
1	0100	6 7/8	3 5/16	5 7/16	5 1/4	7 5/8	1/2	6 1/2	18
1 1/4	0125	8 3/8	4 1/8	5 7/8	7 3/8	9 3/4	3/4	9	30
1 1/2	0150	8 3/8	4 1/8	5 7/8	7 3/8	9 3/4	3/4	9	30
2	0200	9 5/8	4	6 5/8	7 1/8	9 3/4	1	9 1/4	50
2 1/2	0250	12 3/4	5 3/8	8 3/16	8 5/8	12	1 1/2	11 3/8	65
3	0300	13 1/4	5 3/8	8 5/16	12	15 3/4	1 1/2	15	70

Ordering Information

Example: Include full description

Size (Prefix)	Model Number	Screen Opening
0150	**BTC150SS**	**032**

1 1/2" NPT, Basket Strainer, Cast Stainless Steel, 1/32" Perf Screen

Operating Pressures and Temperatures		
Type	Size	psi @ Temp WOG
BTC150SS	1/2" - 3"	275 @ 100 °F

Standard Screens		
Size	Standard	Opening
1/2" - 3"	1/32" perf	0.032"

Sure Flow Equipment Inc.

Toll Free: 1-800-263-8251 Toll Free Fax: 1-800-876-1164
International: 1-905-335-1350 International Fax: 1-905-332-4993
Email: info@sureflowequipment.com www.sureflowequipment.com

INTERTEK ISO 9001:2008

Cast Simplex Strainers

BFH125 - Ductile Iron

Quick Open Swivel Clamp Cover

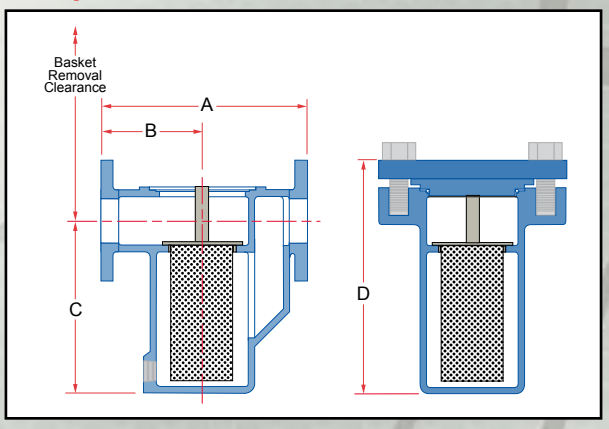

The Sure Flow model BFH125 Basket Strainers are a High Capacity design featuring Class 125 ASME Flanged end connections and top removal of the screen. The screen is in the form of a basket, with a lifting handle, so that all particulate captured and retained by the screen can be easily removed for disposal. They are intended for applications where larger amounts of solid particulate are expected, and where clean-out will be frequent. Models are standard with a bolted "Swivel Clamp Cover" to allow fast and easy screen removal.

Notes:

- Must specify if for steam service

Manufacturer reserves the right to modify dimensions, materials, or design. Consult factory for certification.

Construction

Ductile Iron - Body, Cover
- ASTM A536 Class 65-45-12

BUNA-N - Cover O-Ring

All screens are Stainless Steel

Dimensions (Inches)								
Size		A	B	C	D	Blow Off NPT	Basket Removal Clearance	Shipping Weight (LBS)
Inches	Prefix							
1	0100	7 5/8	3 1/16	5	8 1/4	1/2	6 3/8	55
1 1/2	0150	10 1/4	3 15/16	7	10 5/8	1	8	55
2	0200	10 1/2	4 1/4	7 5/8	11 13/16	1	8 3/4	59
3	0300	13 1/8	4 15/16	10 5/8	15 13/16	1	11 11/16	101
4	0400	16 3/4	6 5/16	10 3/4	17 1/16	1	12	197
6	0600	19 5/8	7 1/2	18 3/8	26	1	19 3/8	362

Ordering Information

Example: Include full description

Size (Prefix)	Model Number	Screen Opening
0250	**BFH125**	**045**

2 1/2" Basket Strainer, Cast Iron, Class 125 ASME Flanges, 3/64" Perf Screen

Operating Pressures and Temperatures		
Type	Size	psi @ Temp WOG
BFH125	1" - 6"	150 @ 150 °F

Standard Screens		
Size	Standard	Opening
1" - 3"	3/64" perf	0.045"
4" - 6"	1/8" perf	0.125"

Cast Basket Strainers

BF125 / BFC125 - Cast Iron

BFC Model has Quick Release Cover

Sure Flow Class 125 ASME Flanged basket strainers in Cast Iron are available with bolted or quick release clamped cover. Clamp cover units (Model BFC) are ideally suited for applications where frequent clean-out of the basket is expected. Having a spare, clean basket on hand will greatly reduce the cleaning time, and differential pressure gauges, with alarms, can be supplied to get the maximum on-stream time between cleaning cycles.

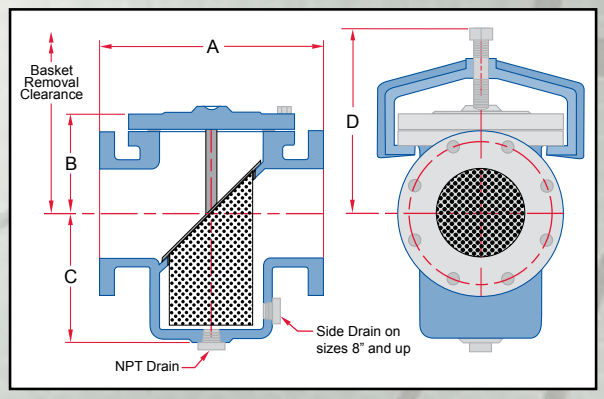

Notes:

- Must specify if for steam service
- Drain location may differ from image shown
- Quick Release Clamp Cover only available on sizes 2" - 12"

Manufacturer reserves the right to modify dimensions, materials, or design. Consult factory for certification.

Construction

Cast Iron - Body, Cover - ASTM A126 Class B

All screens are Stainless Steel

Dimensions (Inches)								
Size		A	B	C	D	Blow Off NPT	Basket Removal Clearance	Shipping Weight (LBS)
Inches	Prefix							
2	0200	8 1/8	3 3/4	5	7 1/2	3/4	10	34
2 1/2	0250	8 1/4	4 5/16	5 3/8	8	3/4	11	43
3	0300	9 7/8	4	6 1/2	8	3/4	11 1/2	60
4	0400	11 1/2	6 9/16	8	10 1/2	1	17 3/4	120
5	0500	13 1/8	7	8	11 1/2	1	18 5/8	140
6	0600	14 7/8	6 5/8	8 5/8	12	1	18 1/8	164
8	0800	18 11/16	9	11 3/4	15	1	26	330
10	1000	20 1/8	10 1/2	13 3/4	15	1	30 1/4	470
12	1200	26 1/4	13 1/8	16 3/8	17 1/2	1	37 3/4	820
14	1400	30 1/4	14 1/2	23	-	2	46 1/8	1300
16	1600	33 1/8	15 9/16	23 1/4	-	2	49 1/4	1600
18	1800	33 1/8	16 1/2	23 1/4	-	2	55 1/2	2260
20	2000	33 1/8	20 1/8	23 5/8	-	2	61 7/8	2980

Ordering Information

Example: Include full description

Size (Prefix)	Model Number	Screen Opening
0400	**BF125**	**125**

4" Basket Strainer, Cast Iron, Class 125 ASME Flanges, 1/8" Perf Screen

Operating Pressures and Temperatures		
Type	Size	psi @ Temp WOG
BF125	2" - 12"	200 @ 150 °F
BF125	14" - 20"	150 @ 150 °F
BFC125	2" - 12"	50 @ 150 °F

Standard Screens		
Size	Standard	Opening
2" - 3"	3/64" perf	0.045"
4" - 20"	1/8" perf	0.125"

ASME Section VIII, Div 1, Current Edition: U and UM CODE STAMP Available

Cast Basket Strainers

BF150 / BF150SS - Cast Steel / Cast 316 Stainless Steel

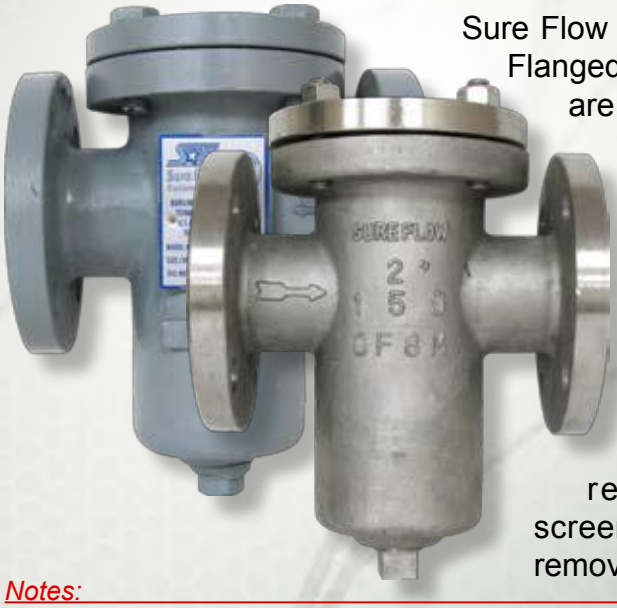

Sure Flow Class 150 ASME Flanged basket strainers are available in Cast Steel and Cast Stainless Steel. The screen is in the form of a basket, with a lifting handle, so that all particulate captured and retained by the screen can be easily removed for disposal.

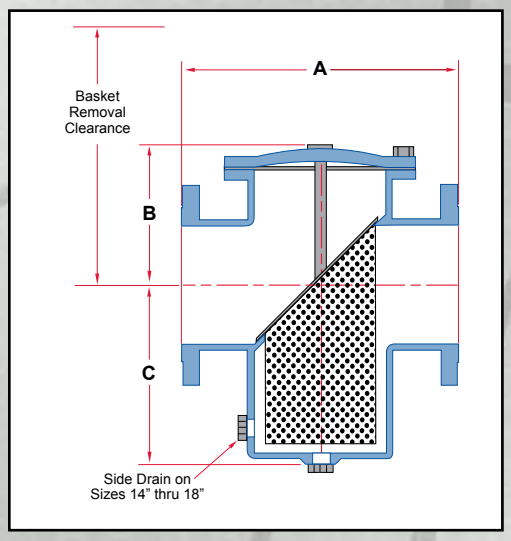

Notes:

- Must specify if for steam service
- 1" - 1 1/2" only available in Stainless Steel
- Drain location may differ from image shown

Manufacturer reserves the right to modify dimensions, materials, or design. Consult factory for certification.

Construction

Carbon Steel - Body, Cover - ASTM A216 Grade WCB
Stainless Steel - Body, Cover - ASTM A351 Grade CF8M
All screens are Stainless Steel

Dimensions (Inches)							
Size		A	B	C	Blow Off NPT	Basket Removal Clearance	Shipping Weight (LBS)
Inches	Prefix						
1	0100	6 1/8	2 5/8	3 3/4	1/2	8 3/4	16
1 1/2	0150	6 1/2	3 1/8	4 1/2	1/2	10 3/4	22
2	0200	8 1/8	4	5 3/8	1	13	34
2 1/2	0250	8 3/4	4 7/16	5 3/4	1	13	43
3	0300	9 7/8	5 1/4	7 1/8	1	18	60
4	0400	11 1/2	5 13/16	8 3/8	1	19	120
6	0600	14 7/8	7 1/4	9	1	24	164
8	0800	18 11/16	9 5/8	12 1/8	1	31	330
10	1000	20 1/8	11	14 1/8	1	37	470
12	1200	26 1/4	12 5/8	16 3/4	1	41	820
14	1400	47 1/8	19 3/4	34 3/8	2	72	2520
16	1600	47 1/8	19 3/4	34 3/8	2	72	2640
18	1800	49 1/2	22	58	2	100	2940

Ordering Information

Example: Include full description

Size (Prefix)	Model Number	Screen Opening
0400	**BF150SS**	**125**

4" Basket Strainer, Cast Stainless Steel, Class 150 ASME Flanges, 1/8" Perf Screen

Operating Pressures and Temperatures		
Type	Size	psi @ Temp WOG
BF150	2" - 18"	285 @ 100 °F
BF150SS	1" - 18"	275 @ 100 °F

Standard Screens		
Size	Standard	Opening
1" - 3"	3/64" perf	0.045"
4" - 18"	1/8" perf	0.125"

ASME Section VIII, Div 1, Current Edition: U and UM CODE STAMP Available

Cast Basket Strainers

BF300 / BF300SS - Cast Steel / Cast 316 Stainless Steel

Sure Flow Class 300 ASME Flanged basket strainers are available in Cast Steel and Cast Stainless Steel. The screen is in the form of a basket, with a lifting handle, so that all particulate captured and retained by the screen can be easily removed for disposal.

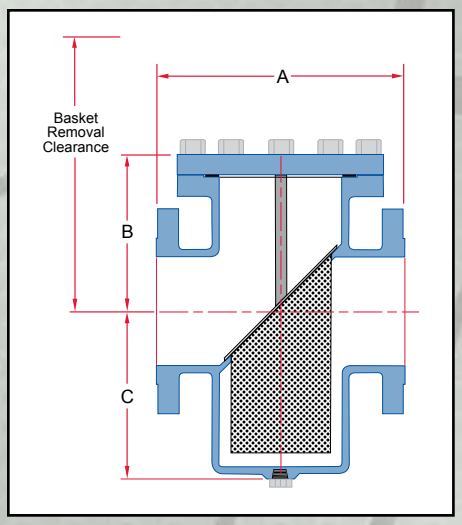

Notes:

- Must specify if for steam service

Manufacturer reserves the right to modify dimensions, materials, or design. Consult factory for certification.

Construction

Carbon Steel - Body, Cover - ASTM A216 Grade WCB
Stainless Steel - Body, Cover - ASTM A351 Grade CF8M
All screens are Stainless Steel

Dimensions (Inches)							
Size		A	B	C	Blow Off NPT	Basket Removal Clearance	Shipping Weight (LBS)
Inches	Prefix						
2	0200	8 1/2	5 7/16	5 3/8	1	13 1/4	45
2 1/2	0250	8 11/16	6 7/16	5 3/4	1	15 3/8	65
3	0300	9 9/16	7	7 1/8	1	17 5/8	81
4	0400	11 3/4	8 3/16	8 3/8	1	21	135
6	0600	14 3/4	9 15/16	9 1/8	1	23 3/4	235
8	0800	18 1/8	11 5/8	12 1/4	1	29 1/8	440

For BF300 10-inch size and BF300 12-inch size:

BW300 10-inch size and BW300 12-inch size Fabricated Basket Strainers are used.

Operating Pressures and Temperatures		
Type	Size	psi @ Temp WOG
BF300	2” - 8”	740 @ 100 °F
BF300SS	2” - 8”	720 @ 100 °F

Ordering Information

Example: Include full description

Size (Prefix)	Model Number	Screen Opening
0400	**BF300SS**	**125**

4” Basket Strainer, Cast Stainless Steel, Class 300 ASME Flanges, 1/8” Perf Screen

Standard Screens		
Size	Standard	Opening
2” - 3”	3/64” perf	0.045”
4” - 8”	1/8” perf	0.125”

Fabricated Basket Strainers

BWEB150 - Carbon Steel
BWEB150SS - Stainless Steel

With Quick Opening Eye Bolts

Sure Flow Fabricated Flanged Basket Strainers were initially developed for the petrochemical market. With continuous success they have now become a standard product available off the shelf in most sizes. The unique quick-opening closure and venting allows the field operator, in a timely and safe fashion, to remove the basket for cleaning. An o-ring seal provides positive sealing of the cover.

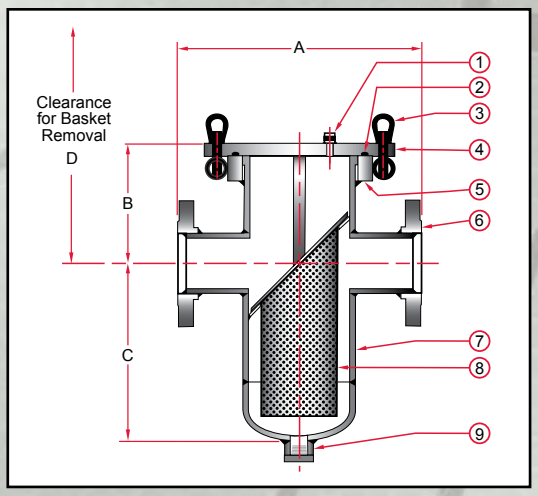

Notes:

- *Higher ASME pressure ratings available*
- *Larger sizes available*

Manufacturer reserves the right to modify dimensions, materials, or design. Consult factory for certification.

Construction									
Item	1	2	3	4	5	6	7	8	9
Description	Vent Assembly	O-Ring	Quick Open Eye Bolts	Cover Plate	Ring Flange	Outlet Nozzle	Body Assembly	Basket	Drain Assembly

Dimensions (Inches)						
Size			A	B	C	D
Inches	Prefix	Body				
2	0200	6	12	7	11	22
2 1/2	0250	6	12	7 1/2	11	25
3	0300	6	12	7 7/8	13	26
4	0400	8	14 7/8	8 5/8	13	27
5	0500	8	14 7/8	9 3/8	17	31 1/2
6	0600	10	18 3/4	10 5/16	20	36
8	0800	12	20 1/8	11 7/8	23	40 3/4
10	1000	14	25 3/8	13 1/4	26	46
12	1200	16	27 5/8	16 5/16	29	55
14	1400	18	29 1/8	17 3/8	32	60
16	1600	20	33 5/8	19	34	64
18	1800	24	38 5/8	20 3/4	39	70
20	2000	24	38 5/8	21 5/8	39	72
24	2400	30	46	24 5/8	45	83

Ordering Information

Example: Include full description

Size (Prefix)	Model Number	Screen Opening
0200	**BWEB150SS**	**045**

2" Basket Strainer, Stainless Steel, Class 150 ASME Flanges, 3/64" Perf Screen

Operating Pressures and Temperatures		
Type	Size	psi @ Temp WOG
BWEB150	2" - 24"	100 @ 150 °F
BWEB150SS	2" - 24"	100 @ 150 °F

ASME Section VIII, Div 1, Current Edition: U and UM CODE STAMP Available

Fabricated Basket Strainers

BW150 / BW300 - Carbon Steel
BW150SS / BW300SS - Stainless Steel

Sure Flow Fabricated Flanged Basket Strainers can be designed to your specific application. Strainers are available in Carbon Steel and Stainless Steel. 2" to 24" pipe sizes in Class 150 and Class 300 are available. ASME flanges are standard, with the capability to supply larger pipe sizes and/or higher ASME pressure ratings. Basket size can be tailored to hold sufficient solids for the required time between clean-outs. Flange sizes can be selected to fit existing piping, or to achieve the required clean pressure drop. Maintenance reducing features include Automatic Flush and Hinged Cover, with or without Davit Assembly.

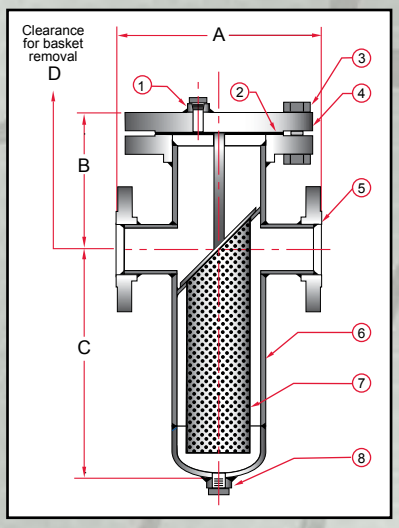

Notes:

- *Higher ASME pressure ratings available*
- *Larger sizes available*

Manufacturer reserves the right to modify dimensions, materials, or design. Consult factory for certification.

Construction								
Item	1	2	3	4	5	6	7	8
Description	Vent Assembly	Gasket	Bolting	Cover	Inlet / Outlet Flange	Body Assembly	Basket	Drain Assembly

Dimensions (Inches)										
Size			A		B		C		D	
Inches	Prefix	Body	150	300	150	300	150	300	150	300
2	0200	6	14	14	7	9	12	12	23	26
2 1/2	0250	6	15	15	8	9	12 1/2	12 1/2	24	26
3	0300	6	15	15	8	9	12 1/2	12 1/2	24	26
4	0400	8	16	16	8 1/4	9 1/2	14	14	28	28
5	0500	10	16	17 1/2	9 1/2	11	15	15	32	33 1/2
6	0600	10	20	21	9 1/2	11	17	17	34	33 1/2
8	0800	12	22	23	11	14	21	21	41	42 1/2
10	1000	16	32	33	14	14 1/2	25	25	47 1/2	49
12	1200	18	35	36	14 1/2	18	28	28	53	54 1/2
14	1400	20	37	38	15 3/4	19	33	33	61	62 3/4
16	1600	24	42	43	18 1/4	22	36	36	63	69 3/4
18	1800	24	42	43	18 1/4	22	39	36	70	71 3/4
20	2000	30	43	50	23 1/4	28	44	44	82	84 1/2
24	2400	36	52	53	27 1/4	31	60	60	98	106 1/2

Ordering Information

Example: Include full description

Size (Prefix)	Model Number	Screen Opening
0800	**BW150SS**	**125**

8" Basket Strainer, Stainless Steel, Class 150 ASME Flanges, 1/8" Perf Screen

Operating Pressures and Temperatures			
Type	Size	psi @ Temp Steam	psi @ Temp WOG
BW150	2" - 24"	150 @ 366 °F	285 @ 100 °F
BW150SS	2" - 24"	150 @ 366 °F	275 @100 °F
BW300	2" - 24"	300 @ 422 °F	740 @ 100 °F
BW300SS	2" - 24"	300 @ 422 °F	720 @100 °F

Sure Flow Equipment Inc.
Toll Free: 1-800-263-8251 Toll Free Fax: 1-800-876-1164
International: 1-905-335-1350 International Fax: 1-905-332-4993
Email: info@sureflowequipment.com www.sureflowequipment.com

ASME Section VIII, Div 1, Current Edition: U and UM CODE STAMP Available

Fabricated Basket Strainers

BW600 - Carbon Steel
BW600SS - Stainless Steel

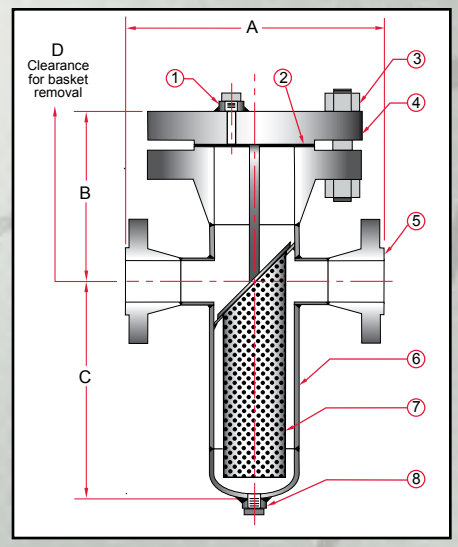

Notes:

- *Higher ASME pressure ratings available*
- *Sizes 8" and up come standard with flat bottom*
- *Larger sizes available*

Manufacturer reserves the right to modify dimensions, materials, or design. Consult factory for certification.

Construction								
Item	1	2	3	4	5	6	7	8
Description	Vent Assembly	Gasket	Bolting	Cover	Inlet / Outlet Flange	Body Assembly	Basket	Drain Assembly

Dimensions (Inches)						
Size			A	B	C	D
Inches	Prefix	Body				
2	0200	6	18 3/8	10 7/16	12	28
2 1/2	0250	6	18 3/8	10 1/2	12	28
3	0300	6	23 7/8	10 3/4	15 3/4	31 1/2
4	0400	8	23 7/8	12 3/16	17 3/8	38
5	0500	8	28	14	17 3/8	40
6	0600	10	29 7/8	14 7/8	21 3/8	42 1/2
8	0800	12	37	15 7/8	23 3/8	50 1/4
10	1000	16	42 1/2	20	27 1/4	57 1/2
12	1200	18	44	22 7/8	30 3/8	66
14	1400	20	46	25	35	72
16	1600	24	54	27 3/4	42 1/4	85
18	1800	24	57	30	47	90 1/2
20	2000	30	60	34	50	98
24	2400	36	68	38	54	112

Ordering Information

Example: Include full description

Size (Prefix)	Model Number	Screen Opening
0400	**BW600SS**	**125**

4" Basket Strainer, Stainless Steel, Class 600 ASME Flanges, 1/8" Perf Screen.

Operating Pressures and Temperatures			
Type	Size	psi @ Temp Steam	psi @ Temp WOG
BW600	2" - 24"	600 @ 489 °F	1480 @ 100 °F
BW600SS	2" - 24"	600 @ 489 °F	1440 @100 °F

ASME Section VIII, Div 1, Current Edition: U and UM CODE STAMP Available

Fabricated Basket Strainers

BWH150 / BWH300 - Carbon Steel
BWH150SS / BWH300SS - Stainless Steel

With Quick Opening Hinged Cover

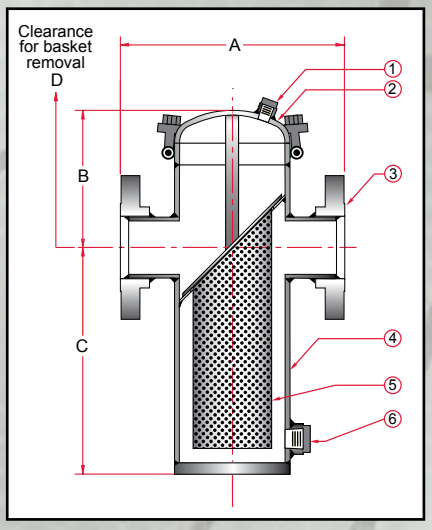

Notes:

- *Higher ASME pressure ratings available*
- *Larger sizes available*

Manufacturer reserves the right to modify dimensions, materials, or design. Consult factory for certification.

Construction						
Item	1	2	3	4	5	6
Description	Vent Assembly	Quick Open Cover	Inlet/Outlet Flange	Body Assembly	Basket	Drain Assembly

Dimensions (Inches)						
Size			A	B	C	D
Inches	Prefix	Body	150 and 300	150 and 300	150 and 300	150 and 300
2	0200	6	14	8 5/8	12 1/4	26
2 1/2	0250	6	15	8 5/8	12 3/4	26
3	0300	6	15	8 5/8	12 3/4	26
4	0400	8	16	9 1/2	14 5/16	28
5	0500	10	16	11 1/4	15 5/8	32
6	0600	10	20	11 1/4	17 3/8	34
8	0800	12	22	13	21 5/8	42
10	1000	16	32	15 3/4	25 7/8	50
12	1200	18	35	17 3/4	28	56
14	1400	20	37	19 3/4	34 1/8	65
16	1600	24	42	23 1/4	36	67
18	1800	24	42	23 1/4	40 1/4	76
20	2000	30	43	27 3/4	45 1/8	82
24	2400	36	52	27 3/4	61 1/2	102

Ordering Information

Example: Include full description

Size (Prefix)	Model Number	Screen Opening
1200	**BWH300SS**	**125**

12" Basket Strainer, Stainless Steel, Class 300 ASME Flanges, 1/8" Perf Screen, Hinged Cover

Operating Pressures and Temperatures			
Type	Size	psi @ Temp Steam	psi @ Temp WOG
BWH150	2" - 24"	150 @ 366 °F	285 @ 100 °F
BWH150SS	2" - 24"	150 @ 366 °F	275 @100 °F
BWH300	2" - 24"	300 @ 422 °F	740 @ 100 °F
BWH300SS	2" - 24"	300 @ 422 °F	720 @100 °F